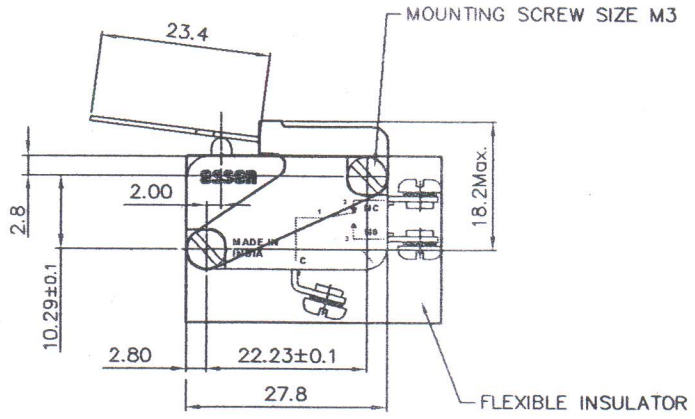

SPECIFICATIONS

Plain lever actuator, supplied with frame to fit on one V3 type micro switch, an insulating sheet and two M3 x 20 mm screws with lock washers and nuts. Use the screws both to mount the frame to the switch and to mount the complete assembly to the application.
Lever ratio 4.4:1.

Suitable for plunger actuated micro switches in the Series MV 25 and MV 27.

MATERIAL

Frame (Bracket)	:	Stainless Steel (1 no.).
Plain Lever	:	Stainless steel (1 no.).
Lock washers	:	Spring steel (2 nos.).
Screws	:	MS, Zinc plated, white passivation, (2 nos.).
Nuts	:	MS, Zinc plated, white passivation (2 nos.).
Flexible Insulator	:	Rubber coated Nylon fabric (1 no.).

CAT. No. : HL13

ISS.	DATE	MODIFICATION	SIGN.

TOLERANCES UNLESS OTHERWISE SPECFIED ±0.1

PLAIN HINGED LEVER ACTUATOR

SUITABLE FOR MICRO SWITCHES

SERIES : MV25 & MV27

DIMENSIONS IN MM

	DATE	SIGN.
DESIGN	22.08.12	
DRAWN	22.08.12	
CHKD.		
APPD.		

SCALE 1:1

ESSEN DEINKI
22, INDUSTRIAL AREA, PHASE II
CHANDIGARH - 160002

DRG. NO. MV25CU-080. A4

SHEET 01 OF 01

C8\PRODUCTSCAN\catalogue june-04\MV25-SERIES\MV25CU