Explosion Proof Microswitch Plain Plunger

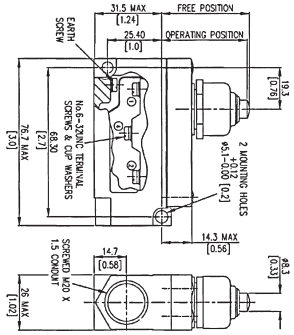

A single pole changeover snap action microswitch enclosed in a stainless steel housing approved to new ATEX standard.
The switch is prefitted with 3 metres of cable.

Electrical rating	5A 250vac 30vdc
Contacts	Single pole changeover / Silver Gold flashed
Temperature	-10º C to +40º C
IP Rating	IP67
Housing / Plunger	Stainless steel, silicone cowl
Approvals	03ATEX0437, EEx de 11C T6 2G
Operating force.N	6.4
Release force.N	1
Pre-travel.mm	-
Differential travel.mm	0.4
Overtravel.mm	4.15

Stock No.	Manf Ref'	Unit Price 1-4	5-9	10+
2193507	E19V3CTQMSGP	222.86	216.17	209.48

Explosion Proof Microswitch with Roller

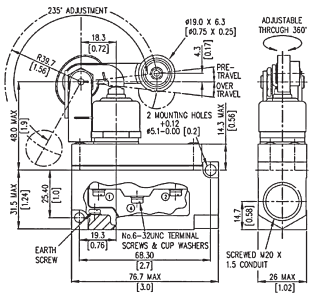

A single pole changeover snap action microswitch with roller level enclosed in a stainless steel housing approved to new ATEX standard.
This switch is prefitted with 3 metres of cable.

Electrical rating	5A 250vac 30vdc
Contacts	Single pole changeover, Silver
Temperature	-10º C to +40º C
IP Rating	IP67
Housing / Plunger	Stainless steel
Approvals	03ATEX0437, EEx de11C T6 2G
Operating force.N	5.6
Release force.N	1
Pre-travel.mm	10
Differential travel.mm	1.3
Overtravel.mm	6.5

Stock No.	Manf Ref'	Unit Price 1-4	5-9	10+
2193511	E19V3CTQMSA/2330	298.57	289.61	280.65

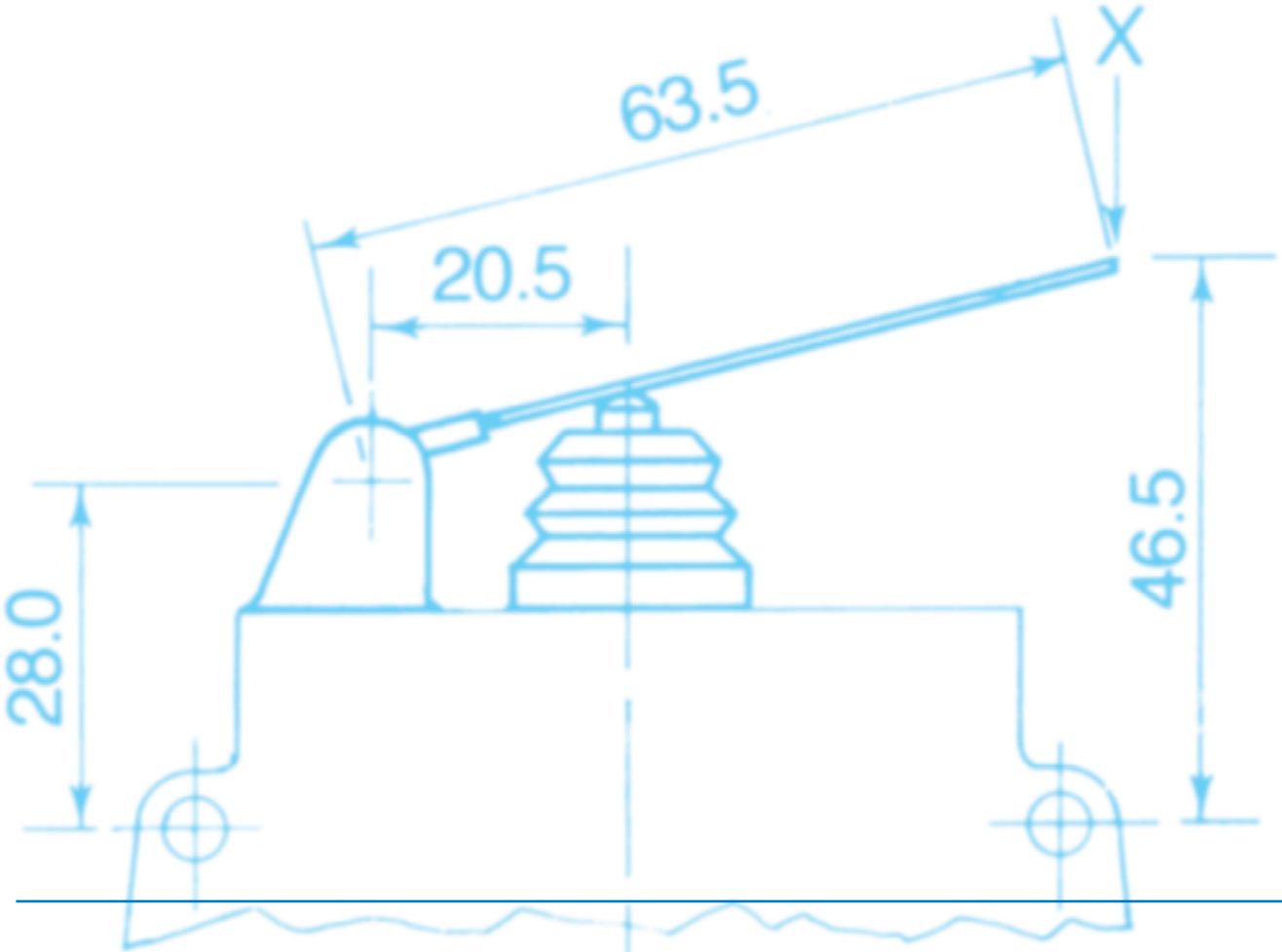

<<28